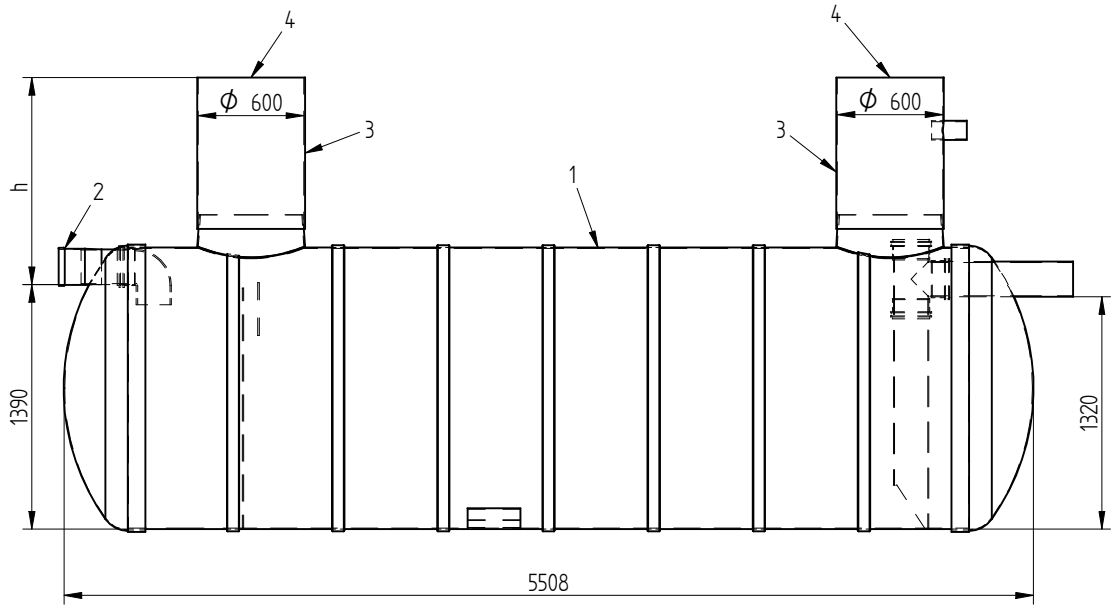

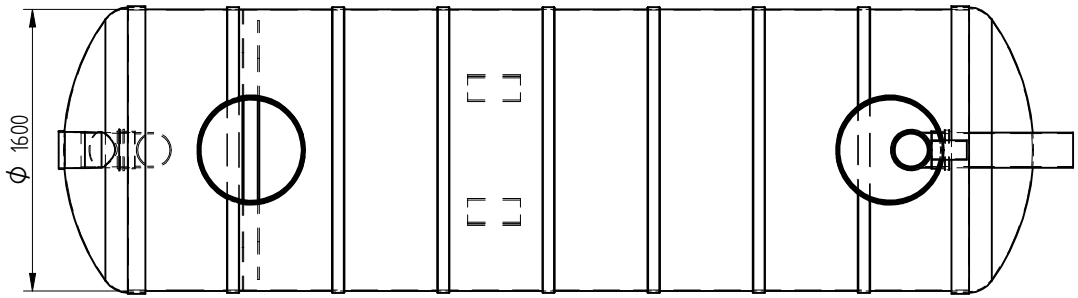

h= inlet pipe height from the ground.

h= _____ mm (standard height 1300mm)

Notes: _____

_____

_____

Pos.	Name	Technical data	Measures	Quantity
1	Body	GRP	D1600, L=5508	1
2	Inlet Pipe	PVC	D200	1
3	Manhole	GRP	D600, D600	1
4	Cover (choose one)	Plastic	D600, D600	
		DI	D600, D600	

Date	Engin.	Signature	Sheets	Grease separator NS20 Name		
eccua				Mass	Number	Rv

All rights reserved.